ANATECH ELECTRONICS INC
RF & Microwave Filters & Products

4640 MHz Ceramic Band Pass Filter

Part Number: AE4640CB1783

ISO 9001 REGISTERED FIRM

Electrical specifications

Center Frequency: 4640 MHz
0.5dB Bandwidth: 110 MHz
Passband: 4585-4695 MHz
Insertion Loss: 4.0 dB Max
Ripple in BW: 0.7 dB Max.
VSWR 1.5:1 dB Min
Rejection 1: 50 dB @ 4475 MHz
Rejection 2: 40 dB @ 4805 MHz
Impedance: 50 Ω
Power Handling: 1 Watt

Mechanical

Connector Type: SMT
Dimensions: 26.4 x 14 x 4.65 mm

Environmental

Operating Temperature: -20 to +70° C
Storage Temperature: -40 to +85° C

Outline Drawing:

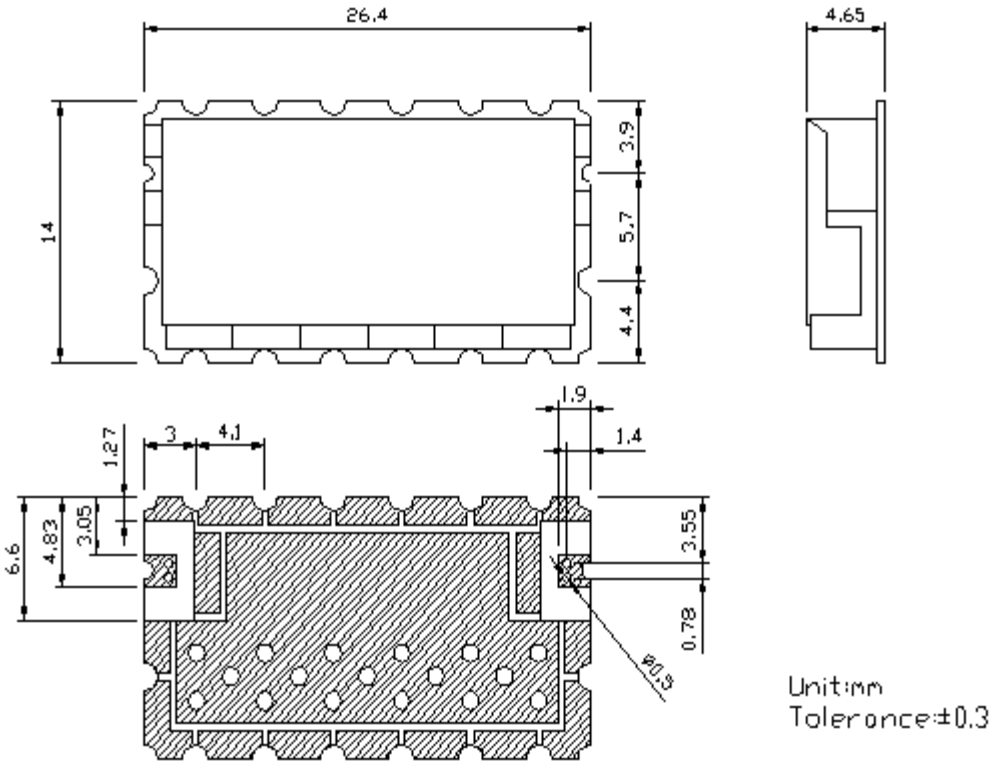

Tolerance: +/-0.01 inches [+/- 0.3mm]
Angles: +/- 1 Deg.
**Tolerance as shown unless otherwise specified in the datasheet electrical specification tables above.*
**When max dimensions are called out the above tolerances do not apply as long as it is under the max call out.*

70 Outwater Lane **Phone: (973) 772-4242** **Email: sales@anatechelectronics.com**
Garfield, NJ 07026 **Fax : (973) 321-3941** **Web: www.anatechelectronics.com**