ANATECH ELECTRONICS, INC.

Manufacturer of RF & Microwave Products

ISO 9001 : 2000 REGISTERED FIRM

170.3 MHz Crystal Bandpass Filter

Part Number: AM170.3CR174

Electrical Specifications:

Filter Type	Band Pass
Center Frequency (Fo)	170.3 MHz
3 dBc Band Width:	3 KHz MIN 100 KHz MAX
Insertion Loss:	5.5dB Max
Pass Band Ripple:	1.0 dB Max
60 dBc Band Width:	300 KHz MAX
Spurious	TBD
Input Power	-5dBm MAX, +15dB GOAL
Impedance:	50 Ohms
Operating Temperature:	Room or Advise
Workmanship	IPC-610 Class 2
RoHS Compliant	NO

Mechanical Package Style:

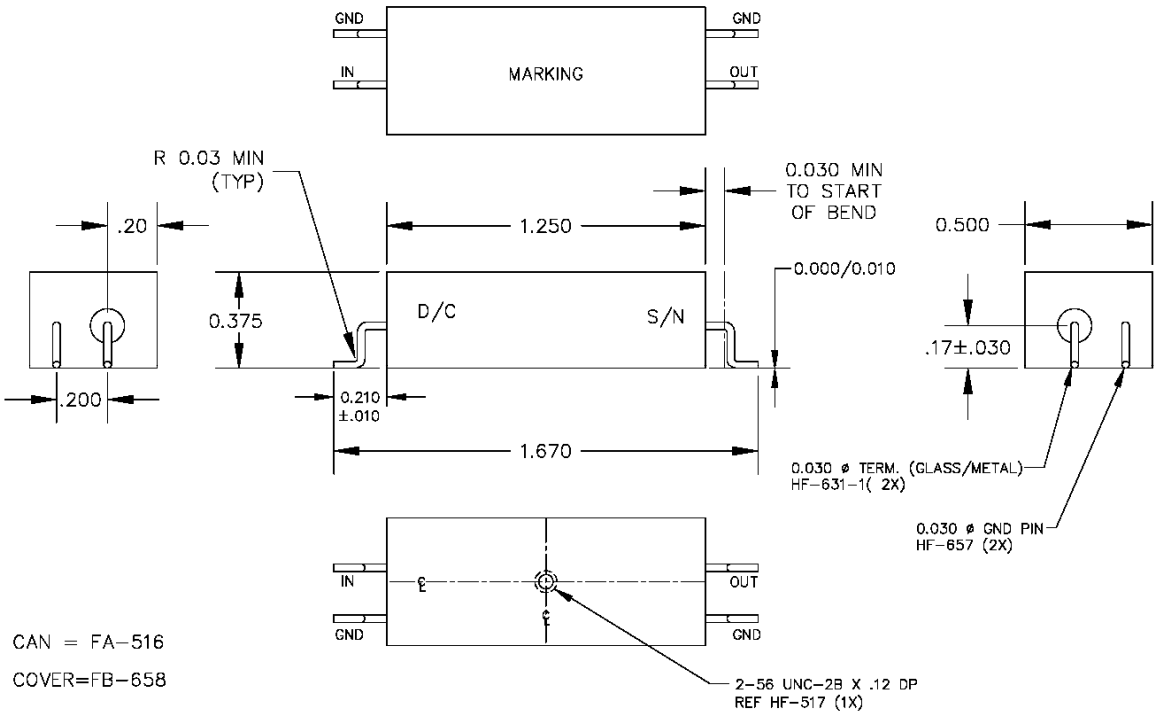

ANATECH ELECTRONICS, INC., 70 Outwater Lane, Garfield, NJ 07026 Tel: (973) 772-4242 Fax: (973) 772-4646
E-Mail: sales@anatechelectronics.com Website: www.anatechelectronics.com